Кухотел SC 20/120 см

МАТЕРИАЛ	ХАРАКТЕРИСТИКИ
Бетон	C≥50/60
Стомана	B500

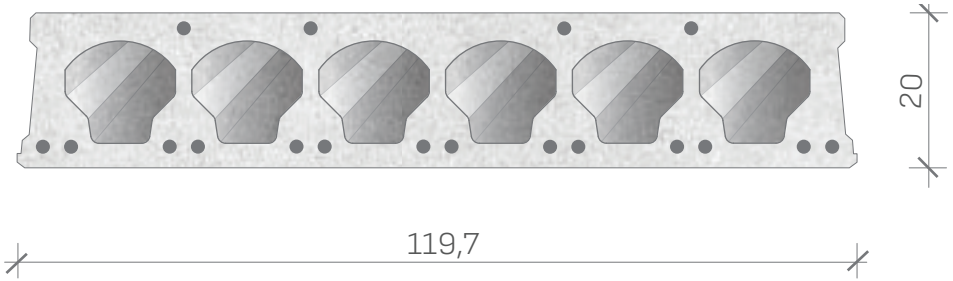

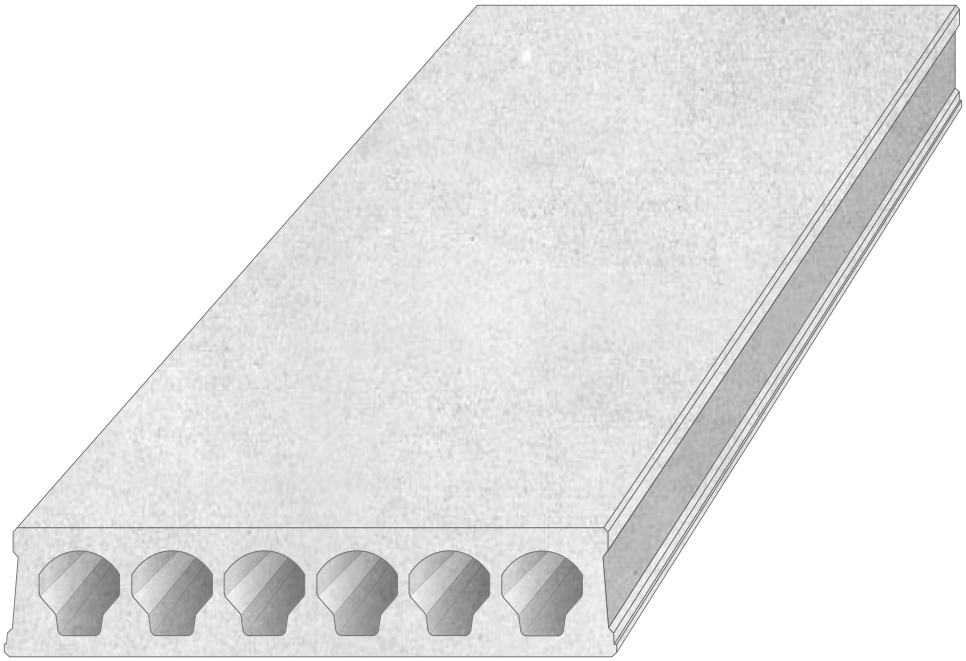

ECHO ENGINEERING N.V.
Industrieterrein Centrum Zuid 1533
B-3530 Houthalen BELGIUM
Tel. +32 11 60 08 00 Fax. +32 11 52 20 93

SC 20x120 - 6 cores *(drawing nr. 55/11172)*

Topping = 0 cm

Reinforcement type	CFB	EFB	GFB	LFB	NFB	PFB	SFB	UFB
Upper reinforcement	4ϕ7	4ϕ7	4ϕ7	4ϕ7	4ϕ7	4ϕ7	4ϕ7	4ϕ7
Lower reinforcement	7ϕ7	7ϕ9.3	5ϕ9.3 + 2ϕ12.5	2ϕ9.3 + 5ϕ12.5	7ϕ12.5	2ϕ9.3 + 7ϕ12.5	5ϕ9.3 + 7ϕ12.5	7ϕ9.3 + 7ϕ12.5
Reinforcement (kg/m²)	2.77	3.39	3.93	4.73	5.27	5.95	6.97	7.65
Mrd (kNm/m)	51.5	75.3	90.5	112.8	127.3	145.7	171.8	187.9

perm. load (kN/m²)	*live load (kN/m²)*	CLEAR SPAN ACCORDING TO EUROCODE							
1.00	*1.00*	6.99	7.72	8.06	8.54	8.84	9.22	9.73	10.02
1.50	*1.00*	6.67	7.38	7.70	8.15	8.43	8.78	9.26	9.53
1.50	*1.50*	6.46	7.26	7.57	8.01	8.28	8.62	9.09	9.36
1.50	*2.00*	6.28	7.15	7.45	7.87	8.14	8.48	8.93	9.19
1.50	*2.50*	6.11	7.04	7.33	7.75	8.01	8.33	8.78	9.04
1.50	*3.00*	5.95	6.94	7.22	7.63	7.88	8.20	8.64	8.89
1.50	*3.50*	5.80	6.84	7.12	7.52	7.76	8.08	8.50	8.75
1.50	*4.00*	5.66	6.75	7.02	7.41	7.65	7.96	8.38	8.62
1.50	*4.50*	5.50	6.66	6.93	7.31	7.54	7.85	8.25	8.49
1.50	*5.00*	5.35	6.48	6.83	7.21	7.44	7.74	8.14	8.37
1.50	*5.50*	5.21	6.31	6.75	7.12	7.35	7.63	8.03	8.25
1.50	*6.00*	5.08	6.16	6.67	7.03	7.25	7.53	7.92	8.14
1.50	*6.50*	4.96	6.01	6.59	6.94	7.16	7.44	7.82	8.04
1.50	*7.00*	4.85	5.88	6.45	6.86	7.08	7.35	7.72	7.94
1.50	*8.00*	4.65	5.63	6.18	6.71	6.92	7.18	7.54	7.75
1.50	*9.00*	4.47	5.41	5.94	6.48	6.76	7.02	7.37	7.57
1.50	*10.00*	4.30	5.22	5.73	6.25	6.52	6.85	7.21	7.41
1.50	*12.50*	3.97	4.81	5.07	5.75	6.03	6.33	6.75	6.99
1.50	*15.00*	3.70	4.48	4.53	5.12	5.50	5.92	6.30	6.53
1.50	*20.00*	3.29	3.99	3.79	4.25	4.55	4.93	5.32	5.35

Self weight of hollow core slab + jointfilling : 3.17 + 0.17 = 3.34 kN/m²
Density of concrete : 2500 kg/m³
Exposure class : 1 (dry environment)
Fire resistance : 1 hour
Deflection criteria :

- Long term deflection under self weight of the slab + total permanent load + 40% of the live load < **L / 250**
- Long term deflection under total permanent load + 40% of the live load < **L / 500**

Acoustic insulation R_w' : 52.7 dB
Thermal resistance R_c : 0.191 m²K/W

Concrete quality : C50/60
Concrete cover on lower reinforcement = 30mm
Prestressing of upper reinforcement = 40% of f_{pk}
Prestressing of lower reinforcement = 60% of f_{pk}

f_{pk} = 1770 N/mm² for wires ϕ5
f_{pk} = 1670 N/mm² for wires ϕ7
f_{pk} = 1860 N/mm² for strands ϕ9.3 and ϕ12.5

Echo Engineering is not responsible for direct or indirect damage as a result of imperfections in these data

B. Hendrikx - 23-06-04

Кухотел SC 20/120 см

МАТЕРИАЛ	ХАРАКТЕРИСТИКИ
Бетон	C≥50/60
Стомана	B500

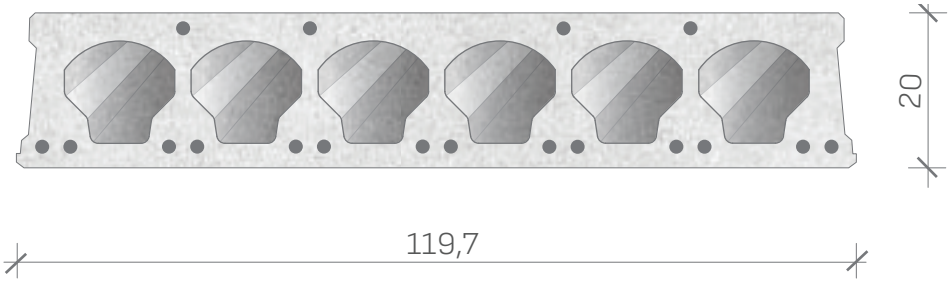

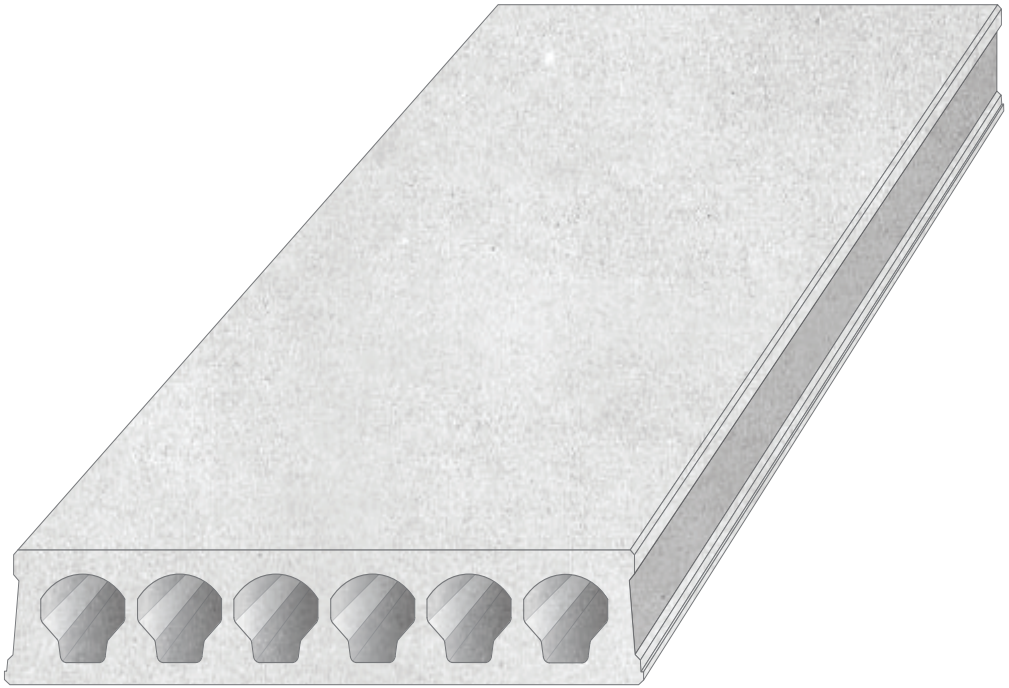

ECHO ENGINEERING N.V.
Industrieterrein Centrum Zuid 1533
B-3530 Houthalen BELGIUM
Tel. +32 11 60 08 00 Fax. +32 11 52 20 93

SC 20x120 - 6 cores *(drawing nr. 55/11172)*

Topping = 0 cm

Reinforcement type	CF6B	EF6B	GF6B	LF6B	NF6B	PF6B	SF6B	UF6B
Upper reinforcement	4ϕ7	4ϕ7	4ϕ7	4ϕ7	4ϕ7	4ϕ7	4ϕ7	4ϕ7
Lower reinforcement	7ϕ7	7ϕ9.3	5ϕ9.3 + 2ϕ12.5	2ϕ9.3 + 5ϕ12.5	7ϕ12.5	2ϕ9.3 + 7ϕ12.5	5ϕ9.3 + 7ϕ12.5	7ϕ9.3 + 7ϕ12.5
Reinforcement (kg/m²)	2.77	3.39	3.93	4.73	5.27	5.95	6.97	7.65
Mrd (kNm/m)	46.9	68.3	81.9	101.8	114.7	131.1	153.6	167.9

perm. load (kN/m²)	*live load (kN/m²)*	CLEAR SPAN ACCORDING TO EUROCODE							
1.00	*1.00*	6.56	7.30	7.56	7.95	8.20	8.52	8.96	9.23
1.50	*1.00*	6.25	6.99	7.24	7.60	7.83	8.12	8.54	8.79
1.50	*1.50*	6.06	6.88	7.12	7.47	7.69	7.98	8.39	8.63
1.50	*2.00*	5.89	6.77	7.01	7.35	7.57	7.85	8.25	8.49
1.50	*2.50*	5.73	6.68	6.90	7.24	7.45	7.73	8.11	8.34
1.50	*3.00*	5.58	6.58	6.80	7.13	7.34	7.61	7.98	8.21
1.50	*3.50*	5.44	6.49	6.71	7.03	7.23	7.50	7.86	8.09
1.50	*4.00*	5.31	6.41	6.62	6.93	7.13	7.39	7.75	7.97
1.50	*4.50*	5.19	6.33	6.54	6.84	7.04	7.29	7.64	7.86
1.50	*5.00*	5.08	6.17	6.45	6.75	6.94	7.19	7.53	7.75
1.50	*5.50*	4.97	6.01	6.38	6.67	6.86	7.10	7.44	7.64
1.50	*6.00*	4.84	5.86	6.30	6.59	6.77	7.01	7.34	7.54
1.50	*6.50*	4.73	5.72	6.23	6.51	6.69	6.92	7.25	7.45
1.50	*7.00*	4.62	5.59	6.13	6.44	6.61	6.84	7.16	7.36
1.50	*8.00*	4.43	5.36	5.88	6.30	6.47	6.69	7.00	7.19
1.50	*9.00*	4.26	5.15	5.65	6.15	6.33	6.55	6.85	7.03
1.50	*10.00*	4.10	4.97	5.33	5.93	6.18	6.42	6.70	6.88
1.50	*12.50*	3.78	4.58	4.67	5.27	5.65	6.00	6.38	6.56
1.50	*15.00*	3.52	4.27	4.19	4.70	5.03	5.45	5.96	6.19
1.50	*20.00*	3.13	3.80	3.51	3.92	4.18	4.52	5.00	5.30

Self weight of hollow core slab + jointfilling : 3.17 + 0.17 = 3.34 kN/m²
Density of concrete : 2500 kg/m³
Exposure class : 1 (dry environment)
Fire resistance : 2 hours
Deflection criteria :

- Long term deflection under self weight of the slab + total permanent load + 40% of the live load < **L / 250**
- Long term deflection under total permanent load + 40% of the live load < **L / 500**

Acoustic insulation R_w' : 52.7 dB
Thermal resistance R_c : 0.191 m²K/W

Concrete quality : C50/60
Concrete cover on lower reinforcement = 45mm
Prestressing of upper reinforcement = 40% of f_{pk}
Prestressing of lower reinforcement = 60% of f_{pk}

f_{pk} = 1770 N/mm² for wires ϕ5
f_{pk} = 1670 N/mm² for wires ϕ7
f_{pk} = 1860 N/mm² for strands ϕ9.3 and ϕ12.5

Echo Engineering is not responsible for direct or indirect damage as a result of imperfections in these data

B. Hendrikx - 23-06-04

Кухотел SC 26,5/120 см

МАТЕРИАЛ	ХАРАКТЕРИСТИКИ
Бетон	C≥50/60
Стомана	B500

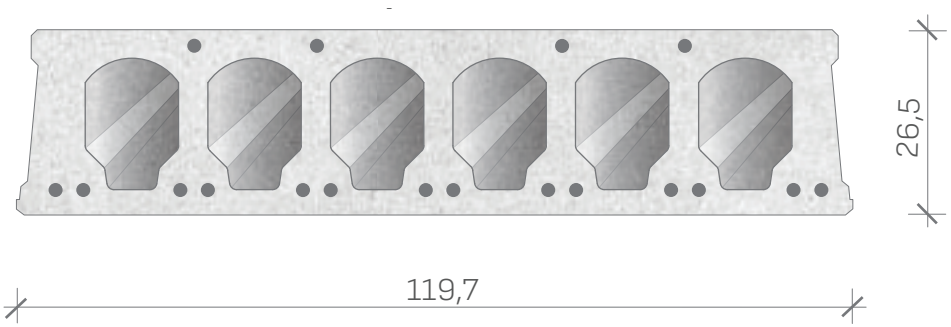

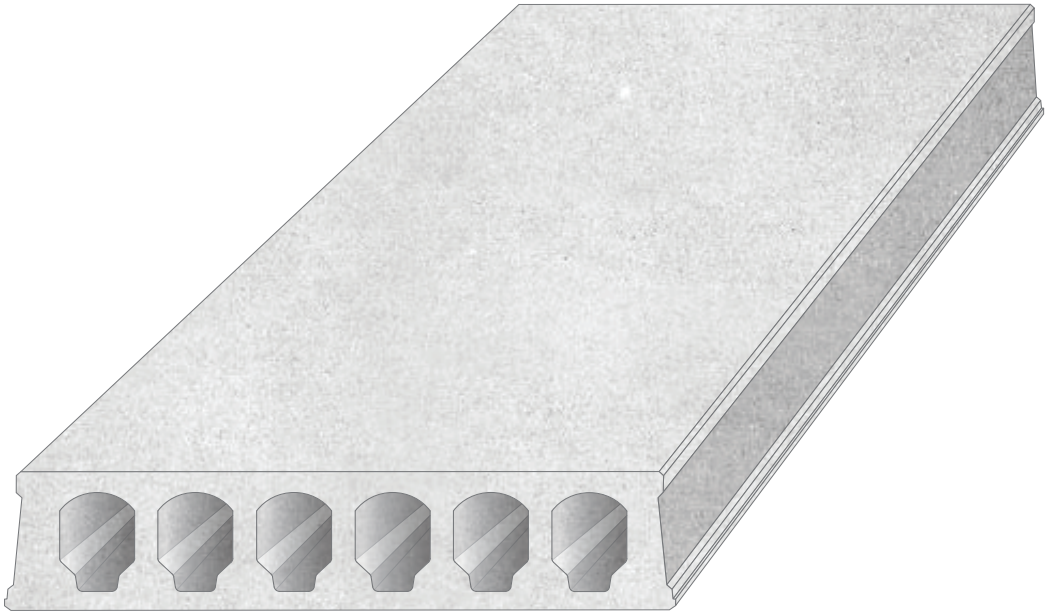

ECHO ENGINEERING N.V.
Industrieterrein Centrum Zuid 1533
B-3530 Houthalen BELGIUM
Tel. +32 11 60 08 00 Fax. +32 11 52 20 93

SC 26,5x120 - 6 cores *(drawing nr. 55/11105)*

Topping = 0 cm

Reinforcement type	EFB	GFB	LFB	NFB	PFB	SFB	WFB	XFB		
Upper reinforcement	4ϕ7	4ϕ7	4ϕ7	4ϕ7	4ϕ7	4ϕ7	4ϕ7	4ϕ7		
Lower reinforcement	7ϕ9.3	5ϕ9.3 + 2ϕ12.5	2ϕ9.3 + 5ϕ12.5	7ϕ12.5	2ϕ9.3 + 7ϕ12.5	5ϕ9.3 + 7ϕ12.5	12ϕ12.5	13ϕ12.5		
Reinforcement (kg/m²)	3.39	3.93	4.73	5.27	5.95	6.97	8.31	10.13		
Mrd (kNm/m)	105.6	127.8	160.4	181.9	209.2	249.3	298.8	356.1		

perm. load (kN/m²)	*live load (kN/m²)*	CLEAR SPAN ACCORDING TO EUROCODE									
1.00	*1.00*	9.46	9.86	10.42	10.77	11.21	11.80	12.45	13.18		
1.50	*1.00*	9.09	9.45	9.98	10.31	10.72	11.28	11.89	12.58		
1.50	*1.50*	8.91	9.31	9.83	10.15	10.55	11.09	11.69	12.36		
1.50	*2.00*	8.67	9.17	9.68	9.99	10.38	10.91	11.50	12.16		
1.50	*2.50*	8.45	9.04	9.53	9.84	10.23	10.75	11.32	11.96		
1.50	*3.00*	8.25	8.92	9.40	9.70	10.07	10.59	11.15	11.78		
1.50	*3.50*	8.05	8.80	9.27	9.57	9.93	10.43	10.98	11.60		
1.50	*4.00*	7.88	8.69	9.15	9.44	9.80	10.29	10.83	11.43		
1.50	*4.50*	7.69	8.47	9.03	9.32	9.67	10.15	10.68	11.28		
1.50	*5.00*	7.49	8.25	8.92	9.20	9.54	10.02	10.54	11.12		
1.50	*5.50*	7.30	8.04	8.81	9.09	9.43	9.89	10.40	10.98		
1.50	*6.00*	7.13	7.85	8.71	8.98	9.31	9.77	10.27	10.84		
1.50	*6.50*	6.97	7.67	8.61	8.88	9.20	9.65	10.15	10.70		
1.50	*7.00*	6.81	7.51	8.42	8.78	9.10	9.54	10.03	10.57		
1.50	*8.00*	6.54	7.20	8.08	8.59	8.90	9.33	9.80	10.33		
1.50	*9.00*	6.29	6.93	7.78	8.29	8.72	9.13	9.59	10.10		
1.50	*10.00*	6.07	6.69	7.51	8.00	8.55	8.95	9.39	9.90		
1.50	*12.50*	5.61	6.18	6.94	7.39	7.93	8.54	8.96	9.42		
1.50	*15.00*	5.24	5.77	6.48	6.90	7.41	8.07	8.58	9.02		
1.50	*20.00*	4.67	5.14	5.78	6.16	6.61	7.22	7.44	7.55		

Self weight of hollow core slab + jointfilling : 3.58 + 0.23 = 3.81 kN/m²
Density of concrete : 2500 kg/m³
Exposure class : 1 (dry environment)
Fire resistance : 1 hour
Deflection criteria :

- Long term deflection under self weight of the slab + total permanent load + 40% of the live load < **L / 250**
- Long term deflection under total permanent load + 40% of the live load < **L / 500**

Acoustic insulation R_w' : 54.4 dB
Thermal resistance R_c : 0.206 m²K/W

Concrete quality : C50/60
Concrete cover on lower reinforcement = 30mm
Prestressing of upper reinforcement = 40% of f_{pk}
Prestressing of lower reinforcement = 60% of f_{pk}

f_{pk} = 1770 N/mm² for wires ϕ5
f_{pk} = 1670 N/mm² for wires ϕ7
f_{pk} = 1860 N/mm² for strands ϕ9.3 and ϕ12.5

Echo Engineering is not responsible for direct or indirect damage as a result of imperfections in these data

B. Hendrikx - 23-06-04

Кухотел SC 26,5/120 см

МАТЕРИАЛ	ХАРАКТЕРИСТИКИ
Бетон	C≥50/60
Стомана	B500

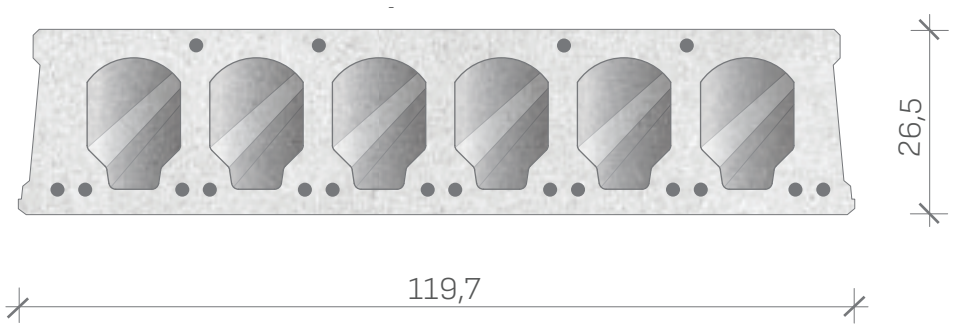

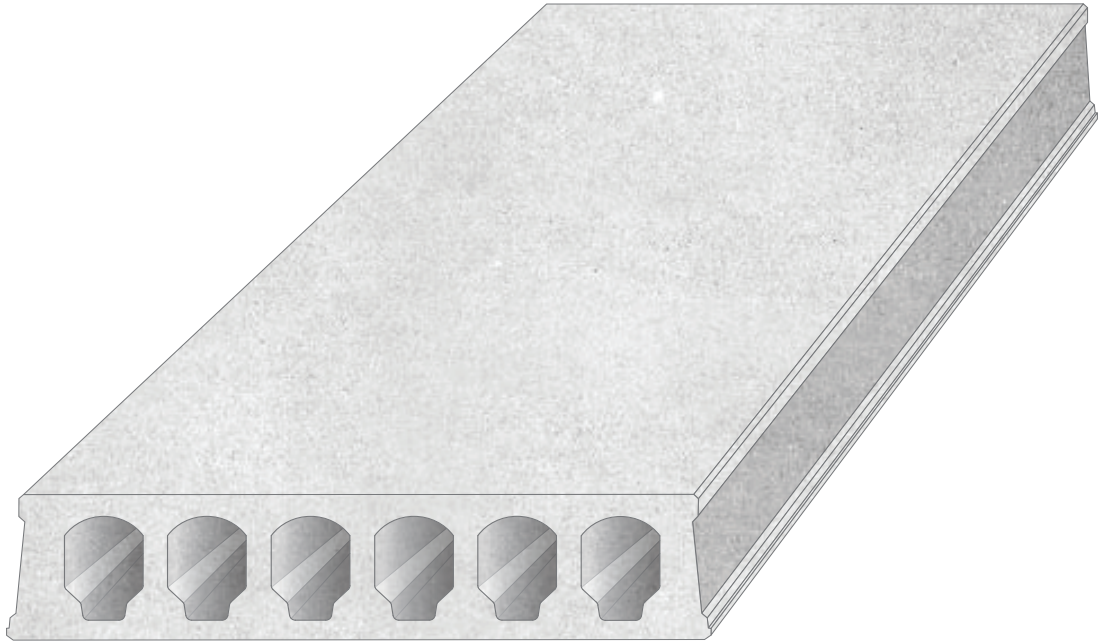

ECHO ENGINEERING N.V.
Industrieterrein Centrum Zuid 1533
B-3530 Houthalen BELGIUM
Tel. +32 11 60 08 00 Fax. +32 11 52 20 93

SC 26,5x120 - 6 cores *(drawing nr. 55/11105)*

Topping = 0 cm

Reinforcement type	EF6B	GF6B	LF6B	NF6B	PF6B	SF6B	WF6B	XF6B		
Upper reinforcement	4ϕ7	4ϕ7	4ϕ7	4ϕ7	4ϕ7	4ϕ7	4ϕ7	4ϕ7		
Lower reinforcement	7ϕ9.3	5ϕ9.3 + 2ϕ12.5	2ϕ9.3 + 5ϕ12.5	7ϕ12.5	2ϕ9.3 + 7ϕ12.5	5ϕ9.3 + 7ϕ12.5	12ϕ12.5	13ϕ12.5		
Reinforcement (kg/m²)	3.39	3.93	4.73	5.27	5.95	6.97	8.31	10.13		
Mrd (kNm/m)	98.6	119.2	149.5	169.4	194.6	231.7	276.4	329.1		

perm. load (kN/m²)	*live load (kN/m²)*	CLEAR SPAN ACCORDING TO EUROCODE									
1.00	***1.00***	9.13	9.48	9.97	10.27	10.67	11.21	11.81	12.52		
1.50	***1.00***	8.74	9.10	9.56	9.85	10.21	10.72	11.29	11.95		
1.50	***1.50***	8.49	8.96	9.41	9.69	10.05	10.55	11.10	11.75		
1.50	***2.00***	8.27	8.83	9.27	9.55	9.89	10.38	10.92	11.56		
1.50	***2.50***	8.06	8.71	9.14	9.41	9.75	10.22	10.75	11.38		
1.50	***3.00***	7.86	8.59	9.01	9.28	9.61	10.07	10.59	11.21		
1.50	***3.50***	7.68	8.48	8.89	9.15	9.48	9.93	10.44	11.04		
1.50	***4.00***	7.51	8.34	8.78	9.03	9.35	9.80	10.29	10.88		
1.50	***4.50***	7.35	8.16	8.67	8.92	9.23	9.67	10.16	10.73		
1.50	***5.00***	7.20	7.96	8.56	8.81	9.12	9.54	10.02	10.59		
1.50	***5.50***	7.05	7.76	8.46	8.70	9.00	9.43	9.90	10.45		
1.50	***6.00***	6.88	7.58	8.37	8.60	8.90	9.31	9.77	10.32		
1.50	***6.50***	6.73	7.41	8.27	8.50	8.80	9.20	9.66	10.20		
1.50	***7.00***	6.58	7.24	8.13	8.41	8.70	9.10	9.55	10.08		
1.50	***8.00***	6.31	6.95	7.80	8.23	8.52	8.90	9.33	9.85		
1.50	***9.00***	6.08	6.69	7.51	8.00	8.34	8.72	9.14	9.64		
1.50	***10.00***	5.86	6.46	7.24	7.72	8.18	8.55	8.95	9.44		
1.50	***12.50***	5.42	5.96	6.69	7.13	7.65	8.16	8.55	9.00		
1.50	***15.00***	5.06	5.57	6.25	6.66	7.14	7.80	8.19	8.62		
1.50	***20.00***	4.51	4.96	5.57	5.94	6.37	6.96	7.40	7.52		

Self weight of hollow core slab + jointfilling : 3.58 + 0.23 = 3.81 kN/m²
Density of concrete : 2500 kg/m³
Exposure class : 1 (dry environment)
Fire resistance : 2 hours
Deflection criteria :

- Long term deflection under self weight of the slab + total permanent load + 40% of the live load < **L / 250**
- Long term deflection under total permanent load + 40% of the live load < **L / 500**

Acoustic insulation R_w^* : 54.4 dB
Thermal resistance R_c : 0.206 m²K/W

Concrete quality : C50/60
Concrete cover on lower reinforcement = 45 mm
Prestressing of upper reinforcement = 40% of f_{pk}
Prestressing of lower reinforcement = 60% of f_{pk}

f_{pk} = 1770 N/mm² for wires ϕ5
f_{pk} = 1670 N/mm² for wires ϕ7
f_{pk} = 1860 N/mm² for strands ϕ9.3 and ϕ12.5

Echo Engineering is not responsible for direct or indirect damage as a result of imperfections in these data

B. Hendrikx - 23-06-04

Кухотел SC32/120 см

МАТЕРИАЛ	ХАРАКТЕРИСТИКИ
Бетон	C≥50/60
Стомана	B500

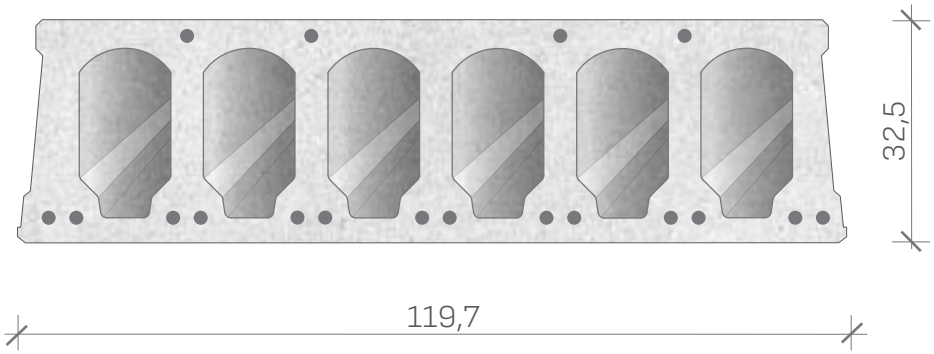

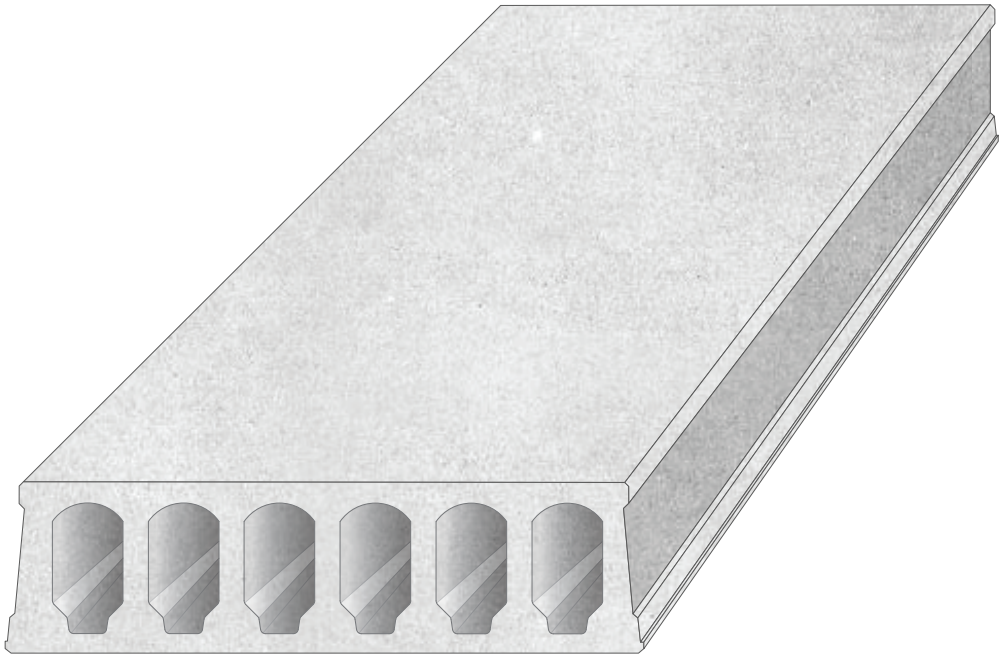

ECHO ENGINEERING N.V.
Industrieterrein Centrum Zuid 1533
B-3530 Houthalen BELGIUM
Tel. +32 11 60 08 00 Fax. +32 11 52 20 93

SC 32x120 - 6 cores *(drawing nr. 55/11008)*

Topping = 0 cm

Reinforcement type	GF4B	LF4B	PF4B	RF4B	UF4B	WF4B	ZF4B			
Upper reinforcement	4ϕ7	4ϕ7	4ϕ7	4ϕ7	4ϕ7	4ϕ7	4ϕ7			
Lower reinforcement	5ϕ9.3 + 2ϕ12.5	2ϕ9.3 + 5ϕ12.5	2ϕ9.3 + 7ϕ12.5	4ϕ9.3 + 7ϕ12.5	7ϕ9.3 + 7ϕ12.5	12ϕ12.5	14ϕ12.5			
Reinforcement (kg/m²)	3.93	4.73	5.95	6.63	7.65	8.31	9.52			
Mrd (kNm/m)	156.4	197.0	257.9	291.6	341.2	371.3	425.5			

perm. load (kN/m²)	*live load (kN/m²)*	CLEAR SPAN ACCORDING TO EUROCODE									
1.00	***1.00***	11.08	11.67	12.50	12.93	13.52	13.85	14.43			
1.50	***1.00***	10.67	11.23	12.01	12.42	12.98	13.28	13.83			
1.50	***1.50***	10.52	11.07	11.83	12.23	12.78	13.08	13.62			
1.50	***2.00***	10.28	10.91	11.66	12.05	12.59	12.88	13.41			
1.50	***2.50***	10.04	10.77	11.50	11.88	12.41	12.70	13.21			
1.50	***3.00***	9.81	10.63	11.35	11.72	12.24	12.52	13.03			
1.50	***3.50***	9.60	10.49	11.20	11.57	12.07	12.35	12.85			
1.50	***4.00***	9.40	10.37	11.06	11.42	11.92	12.19	12.68			
1.50	***4.50***	9.15	10.25	10.92	11.28	11.77	12.03	12.52			
1.50	***5.00***	8.93	10.03	10.79	11.14	11.62	11.89	12.36			
1.50	***5.50***	8.71	9.79	10.67	11.01	11.48	11.74	12.21			
1.50	***6.00***	8.52	9.57	10.55	10.89	11.35	11.61	12.06			
1.50	***6.50***	8.33	9.36	10.44	10.77	11.22	11.48	11.92			
1.50	***7.00***	8.16	9.17	10.33	10.65	11.10	11.35	11.79			
1.50	***8.00***	7.84	8.81	10.09	10.43	10.87	11.11	11.54			
1.50	***9.00***	7.55	8.49	9.73	10.23	10.65	10.88	11.30			
1.50	***10.00***	7.30	8.20	9.40	10.00	10.45	10.68	11.08			
1.50	***12.50***	6.76	7.60	8.71	9.26	9.95	10.21	10.59			
1.50	***15.00***	6.32	7.10	8.14	8.67	9.32	9.60	10.07			
1.50	***20.00***	5.65	6.35	7.28	7.75	8.36	8.61	9.04			

Self weight of hollow core slab + jointfilling : 4.04 + 0.28 = 4.32 kN/m²
Density of concrete : 2500 kg/m³
Exposure class : 1 (dry environment)
Fire resistance : 1 hour
Deflection criteria :

- Long term deflection under self weight of the slab + total permanent load + 40% of the live load < **L / 250**
- Long term deflection under total permanent load + 40% of the live load < **L / 500**

Acoustic insulation R_w' : 56.1 dB
Thermal resistance R_c : 0.216 m²K/W

Concrete quality : C50/60
Concrete cover on lower reinforcement = 35mm
Prestressing of upper reinforcement = 40% of f_{pk}
Prestressing of lower reinforcement = 60% of f_{pk}

f_{pk} = 1770 N/mm² for wires ϕ5
f_{pk} = 1670 N/mm² for wires ϕ7
f_{pk} = 1860 N/mm² for strands ϕ9.3 and ϕ12.5

B. Hendrikx - 23-06-04

Кухотел SC32/120 см

МАТЕРИАЛ	ХАРАКТЕРИСТИКИ
Бетон	C≥50/60
Стомана	B500

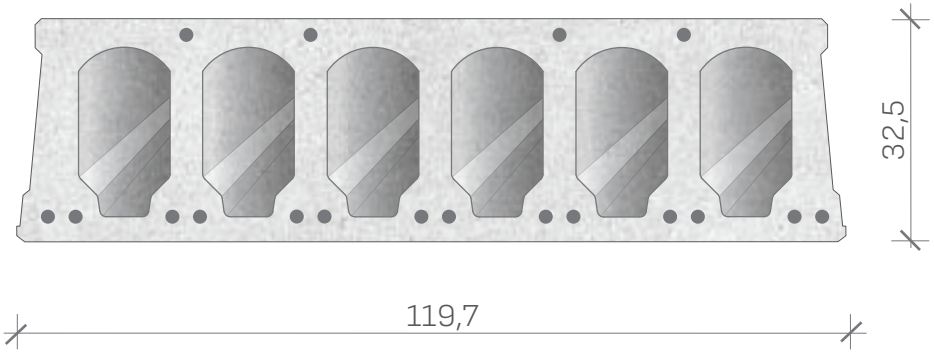

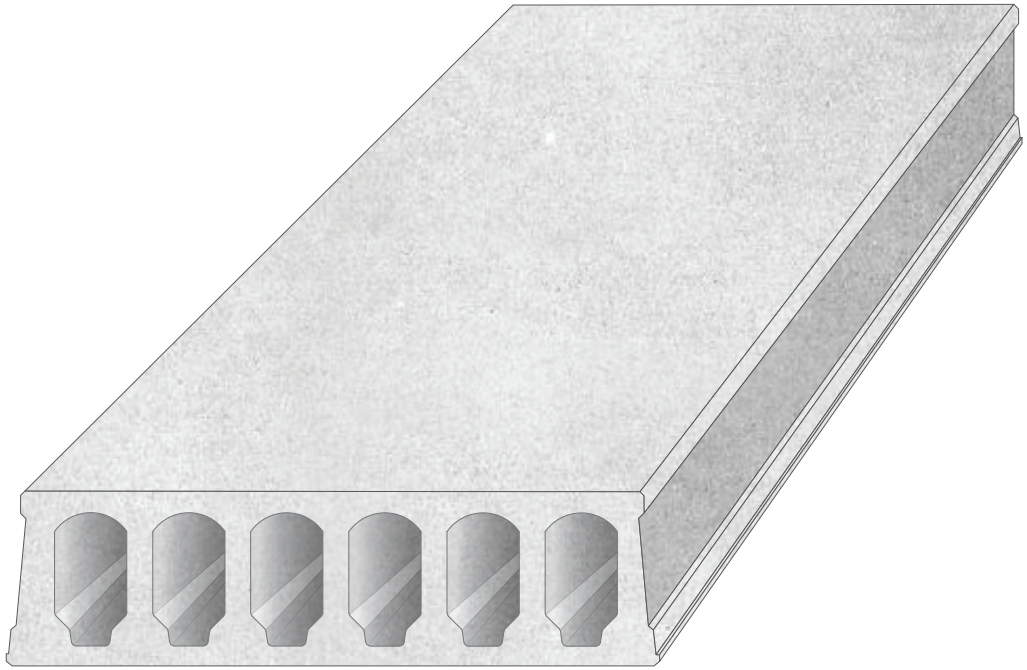

ECHO ENGINEERING N.V.
Industrieterrein Centrum Zuid 1533
B-3530 Houthalen BELGIUM
Tel. +32 11 60 08 00 Fax. +32 11 52 20 93

SC 32x120 - 6 cores *(drawing nr. 55/11008)*

Topping = 0 cm

Reinforcement type	GF6B	LF6B	PF6B	RF6B	UF6B	WF6B	ZF6B			
Upper reinforcement	4ϕ7	4ϕ7	4ϕ7	4ϕ7	4ϕ7	4ϕ7	4ϕ7			
Lower reinforcement	5ϕ9.3 + 2ϕ12.5	2ϕ9.3 + 5ϕ12.5	2ϕ9.3 + 7ϕ12.5	4ϕ9.3 + 7ϕ12.5	7ϕ9.3 + 7ϕ12.5	12ϕ12.5	14ϕ12.5			
Reinforcement (kg/m²)	3.93	4.73	5.95	6.63	7.65	8.31	9.52			
Mrd (kNm/m)	150.7	189.7	248.2	280.6	328.1	356.9	408.1			

perm. load (kN/m²)	*live load (kN/m²)*	CLEAR SPAN ACCORDING TO EUROCODE									
1.00	*1.00*	10.87	11.42	12.20	12.60	13.17	13.48	14.04			
1.50	*1.00*	10.45	10.99	11.72	12.11	12.64	12.93	13.47			
1.50	*1.50*	10.18	10.83	11.55	11.93	12.45	12.74	13.26			
1.50	*2.00*	9.93	10.68	11.38	11.75	12.27	12.55	13.06			
1.50	*2.50*	9.69	10.54	11.23	11.59	12.09	12.37	12.87			
1.50	*3.00*	9.48	10.41	11.08	11.43	11.93	12.20	12.69			
1.50	*3.50*	9.27	10.28	10.94	11.28	11.77	12.03	12.52			
1.50	*4.00*	9.08	10.15	10.80	11.14	11.62	11.88	12.35			
1.50	*4.50*	8.90	10.04	10.67	11.01	11.47	11.73	12.19			
1.50	*5.00*	8.73	9.84	10.55	10.87	11.33	11.59	12.04			
1.50	*5.50*	8.55	9.61	10.43	10.75	11.20	11.45	11.90			
1.50	*6.00*	8.36	9.39	10.31	10.63	11.07	11.32	11.76			
1.50	*6.50*	8.17	9.18	10.20	10.51	10.95	11.19	11.63			
1.50	*7.00*	8.00	8.99	10.09	10.40	10.83	11.07	11.50			
1.50	*8.00*	7.69	8.64	9.89	10.19	10.61	10.83	11.25			
1.50	*9.00*	7.41	8.33	9.54	9.99	10.40	10.62	11.02			
1.50	*10.00*	7.16	8.05	9.22	9.80	10.20	10.42	10.81			
1.50	*12.50*	6.63	7.45	8.54	9.08	9.76	9.96	10.33			
1.50	*15.00*	6.20	6.97	7.99	8.50	9.15	9.41	9.88			
1.50	*20.00*	5.54	6.23	7.14	7.60	8.20	8.44	8.86			

Self weight of hollow core slab + jointfilling : 4.04 + 0.28 = 4.32 kN/m²
Density of concrete : 2500 kg/m³
Exposure class : 1 (dry environment)
Fire resistance : 2 hours
Deflection criteria :

- Long term deflection under self weight of the slab + total permanent load + 40% of the live load < **L / 250**
- Long term deflection under total permanent load + 40% of the live load < **L / 500**

Acoustic insulation R_w' : 56.1 dB
Thermal resistance R_c : 0.216 m²K/W

Concrete quality : C50/60
Concrete cover on lower reinforcement = 45 mm
Prestressing of upper reinforcement = 40% of f_{pk}
Prestressing of lower reinforcement = 60% of f_{pk}

f_{pk} = 1770 N/mm² for wires ϕ5
f_{pk} = 1670 N/mm² for wires ϕ7
f_{pk} = 1860 N/mm² for strands ϕ9.3 and ϕ12.5

Echo Engineering is not responsible for direct or indirect damage as a result of imperfections in these data

B. Hendrikx - 23-06-04

Кухотел SC40/120 см

МАТЕРИАЛ	ХАРАКТЕРИСТИКИ
Бетон	C≥50/60
Стомана	B500

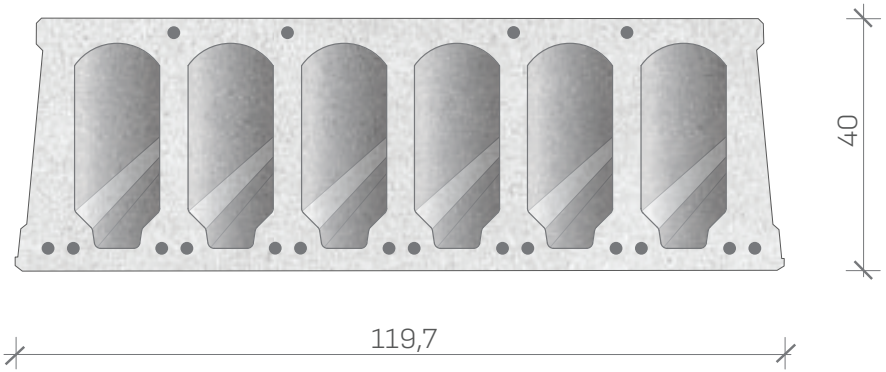

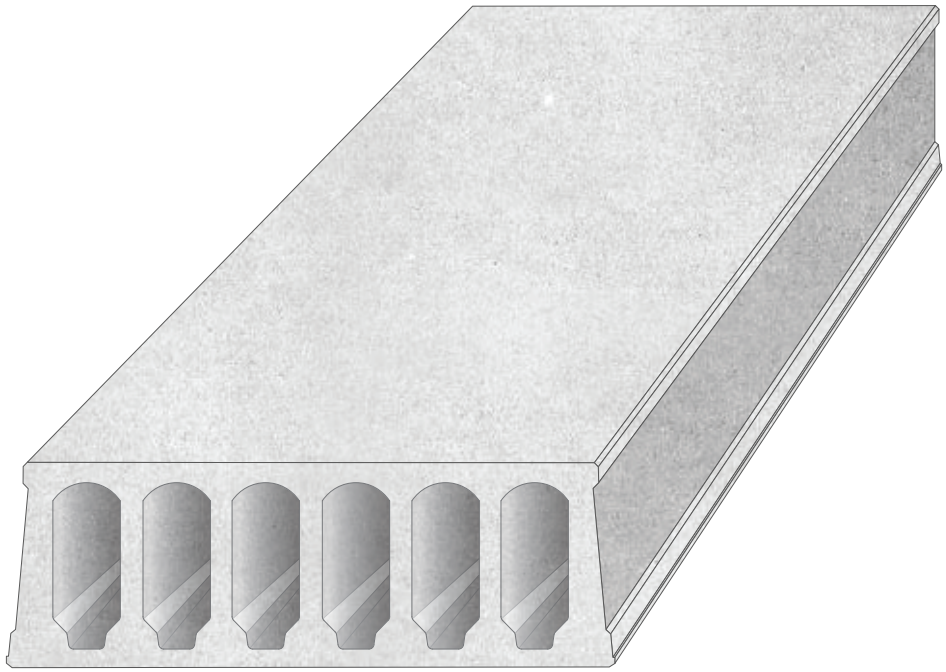

ECHO ENGINEERING N.V.
Industrieterrein Centrum Zuid 1533
B-3530 Houthalen BELGIUM
Tel. +32 11 60 08 00 Fax. +32 11 52 20 93

SC 40x120 - 6 cores *(drawing nr. 55/11009)*

Topping = 0 cm

Reinforcement type	GF4B	LF4B	PF4B	RF4B	UF4B	WF4B	ZF4B			
Upper reinforcement	4ϕ7	4ϕ7	4ϕ7	4ϕ7	4ϕ7	4ϕ7	4ϕ7			
Lower reinforcement	5ϕ9.3 + 2ϕ12.5	2ϕ9.3 + 5ϕ12.5	2ϕ9.3 + 7ϕ12.5	4ϕ9.3 + 7ϕ12.5	7ϕ9.3 + 7ϕ12.5	12ϕ12.5	14ϕ12.5			
Reinforcement (kg/m²)	3.93	4.73	5.95	6.63	7.65	8.31	9.52			
Mrd (kNm/m)	202.4	255.6	335.8	380.4	446.4	487.0	561.9			

perm. load (kN/m²)	*live load (kN/m²)*	CLEAR SPAN ACCORDING TO EUROCODE									
1.00	***1.00***	12.17	13.45	14.35	14.82	15.47	15.84	16.49			
1.50	***1.00***	11.73	12.99	13.85	14.29	14.91	15.26	15.88			
1.50	***1.50***	11.45	12.82	13.66	14.10	14.70	15.05	15.65			
1.50	***2.00***	11.19	12.66	13.48	13.91	14.51	14.84	15.44			
1.50	***2.50***	10.95	12.41	13.31	13.73	14.32	14.65	15.23			
1.50	***3.00***	10.72	12.15	13.15	13.56	14.14	14.46	15.04			
1.50	***3.50***	10.51	11.91	13.00	13.40	13.96	14.28	14.85			
1.50	***4.00***	10.30	11.64	12.85	13.24	13.80	14.11	14.67			
1.50	***4.50***	10.09	11.36	12.70	13.09	13.64	13.95	14.49			
1.50	***5.00***	9.85	11.09	12.56	12.95	13.49	13.79	14.33			
1.50	***5.50***	9.63	10.84	12.43	12.81	13.34	13.64	14.17			
1.50	***6.00***	9.42	10.60	12.17	12.68	13.19	13.49	14.01			
1.50	***6.50***	9.23	10.38	11.92	12.55	13.06	13.35	13.86			
1.50	***7.00***	9.04	10.18	11.68	12.42	12.93	13.21	13.72			
1.50	***8.00***	8.70	9.80	11.25	11.98	12.67	12.95	13.45			
1.50	***9.00***	8.40	9.46	10.86	11.57	12.27	12.65	13.19			
1.50	***10.00***	8.13	9.15	10.51	11.19	11.89	12.26	12.90			
1.50	***12.50***	7.54	8.49	9.75	10.39	11.07	11.41	12.01			
1.50	***15.00***	7.07	7.96	9.14	9.74	10.40	10.72	11.29			
1.50	***20.00***	6.33	7.13	8.20	8.73	9.35	9.64	10.15			

Self weight of hollow core slab + jointfilling : 4.61 + 0.36 = 4.98 kN/m²
Density of concrete : 2500 kg/m³
Exposure class : 1 (dry environment)
Fire resistance : 1 hour
Deflection criteria :

- Long term deflection under self weight of the slab + total permanent load + 40% of the live load < **L / 250**
- Long term deflection under total permanent load + 40% of the live load < **L / 500**

Acoustic insulation R_w' : 57.9 dB
Thermal resistance R_c : 0.232 m²K/W

Concrete quality : C50/60
Concrete cover on lower reinforcement = 35mm
Prestressing of upper reinforcement = 40% of f_{pk} — *f_{pk} = 1770 N/mm² for wires ϕ5*
Prestressing of lower reinforcement = 60% of f_{pk} — *f_{pk} = 1670 N/mm² for wires ϕ7*
f_{pk} = 1860 N/mm² for strands ϕ9.3 and ϕ12.5

Echo Engineering is not responsible for direct or indirect damage as a result of imperfections in these data

B. Hendrikx - 23-06-04